EAGLE MOUNTAIN
Flag & Flagpole

Job Name

Part Number

Date

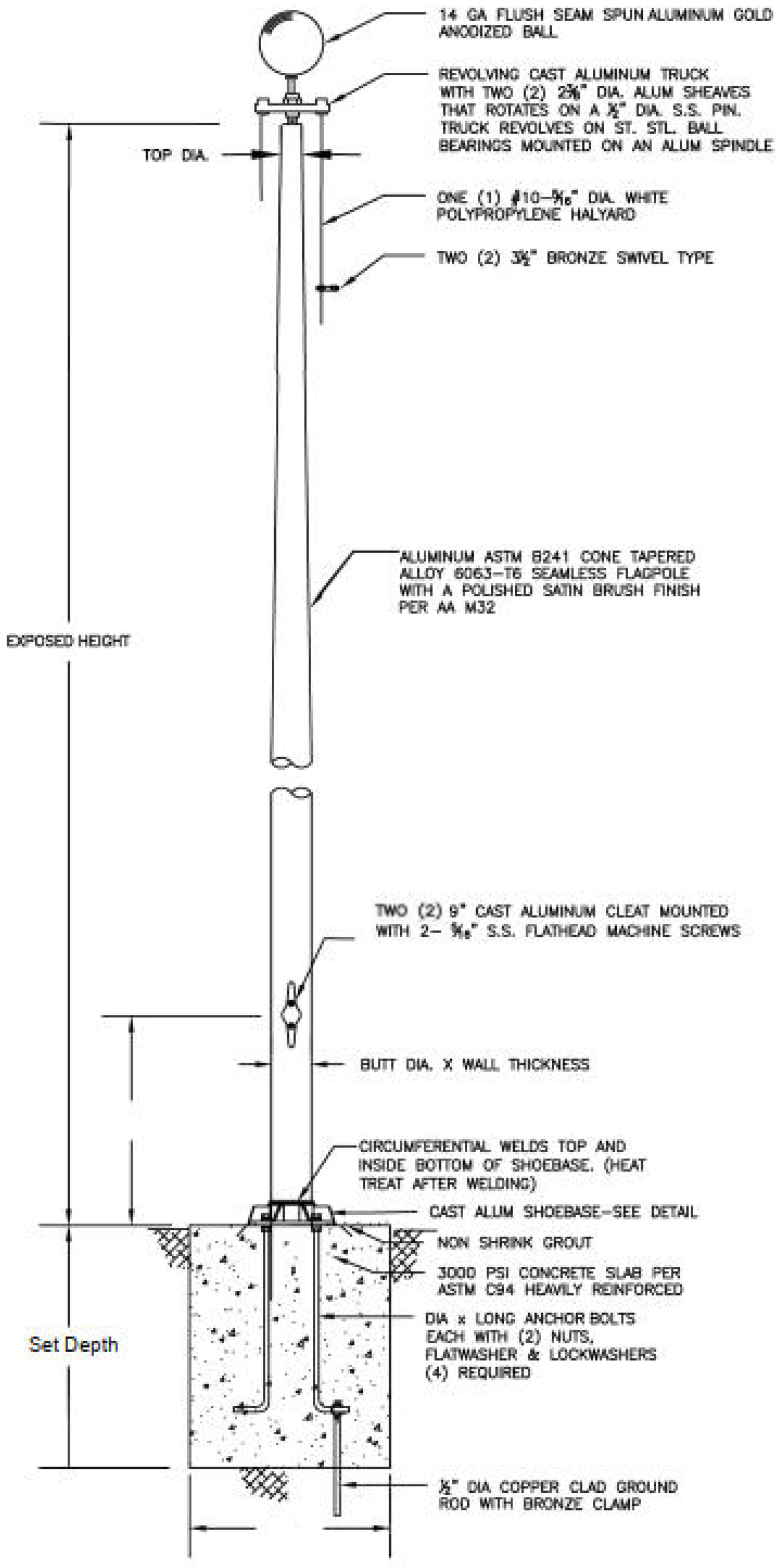

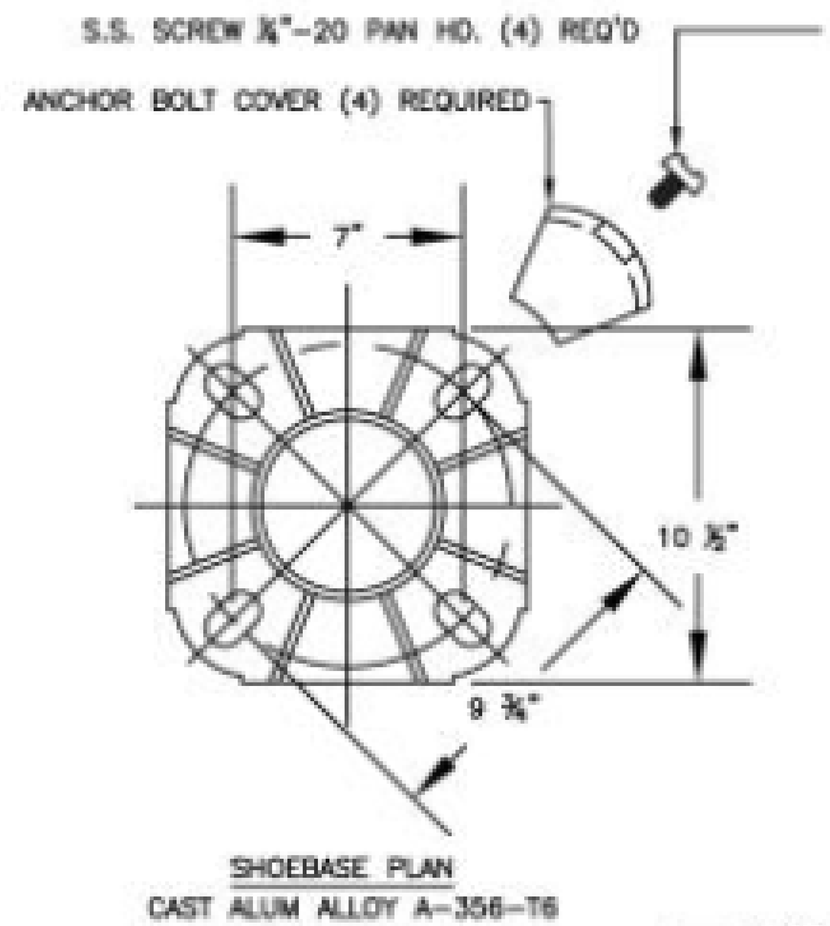

Specifications
Exposed Height:
Set Depth:
Total Length:
Butt Diameter:
Wall Thickness:
Top Diameter:
Flagpole Sections:
* Max Flag Size:
* Max Wind Speed w/Nylon Flag:
* Max Wind Speed No Flag:
* Wind Speed Specifications from ANSI/NAAMM FP 1001-07

Eagle Mountain
Flag & Flagpole

333 FM 2325 Wimberley, TX 78676

512-847-0010
info@emflag.com