EAGLE MOUNTAIN
Flag & Flagpole

Job Name	Date	Part Number

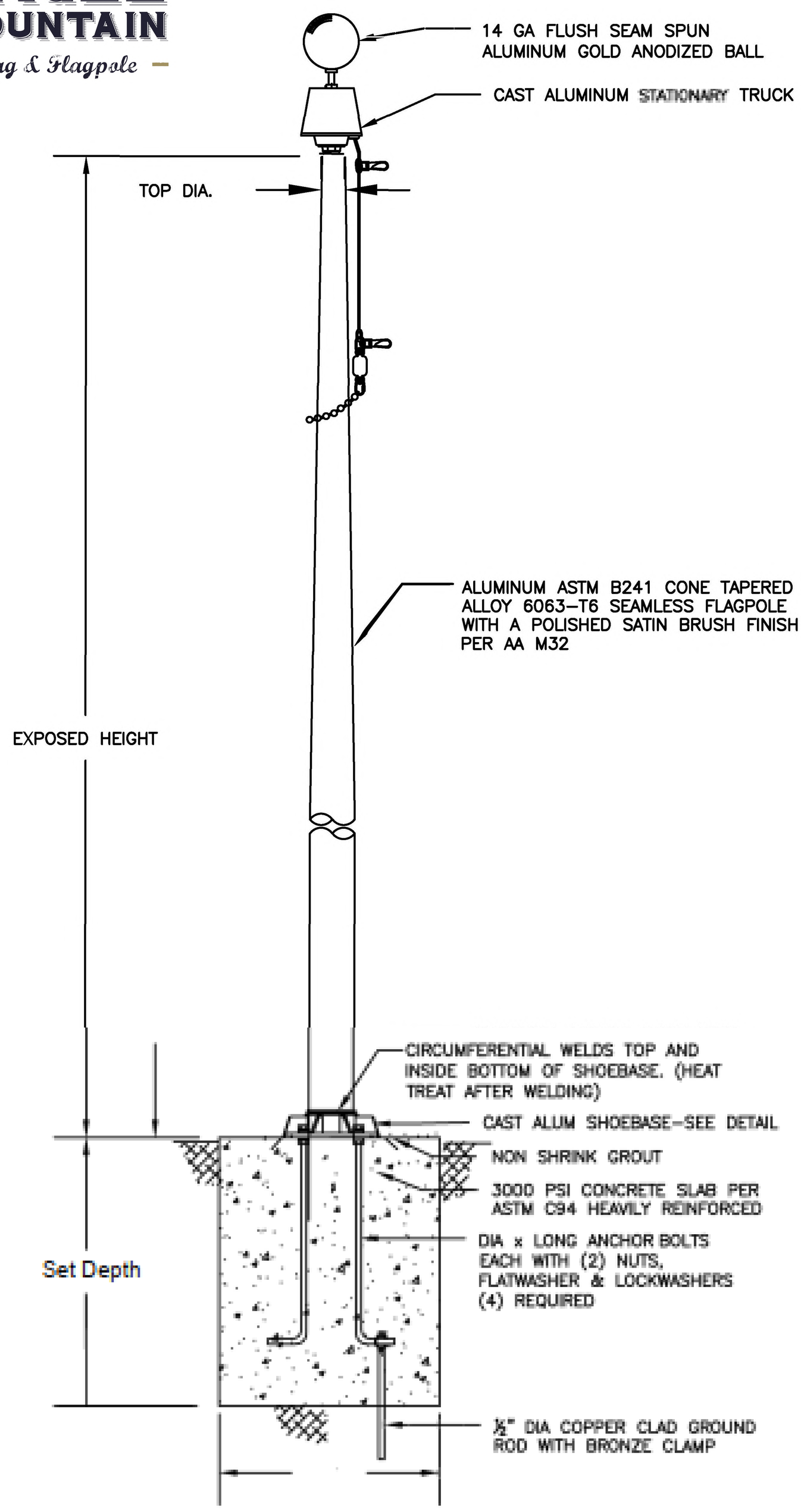

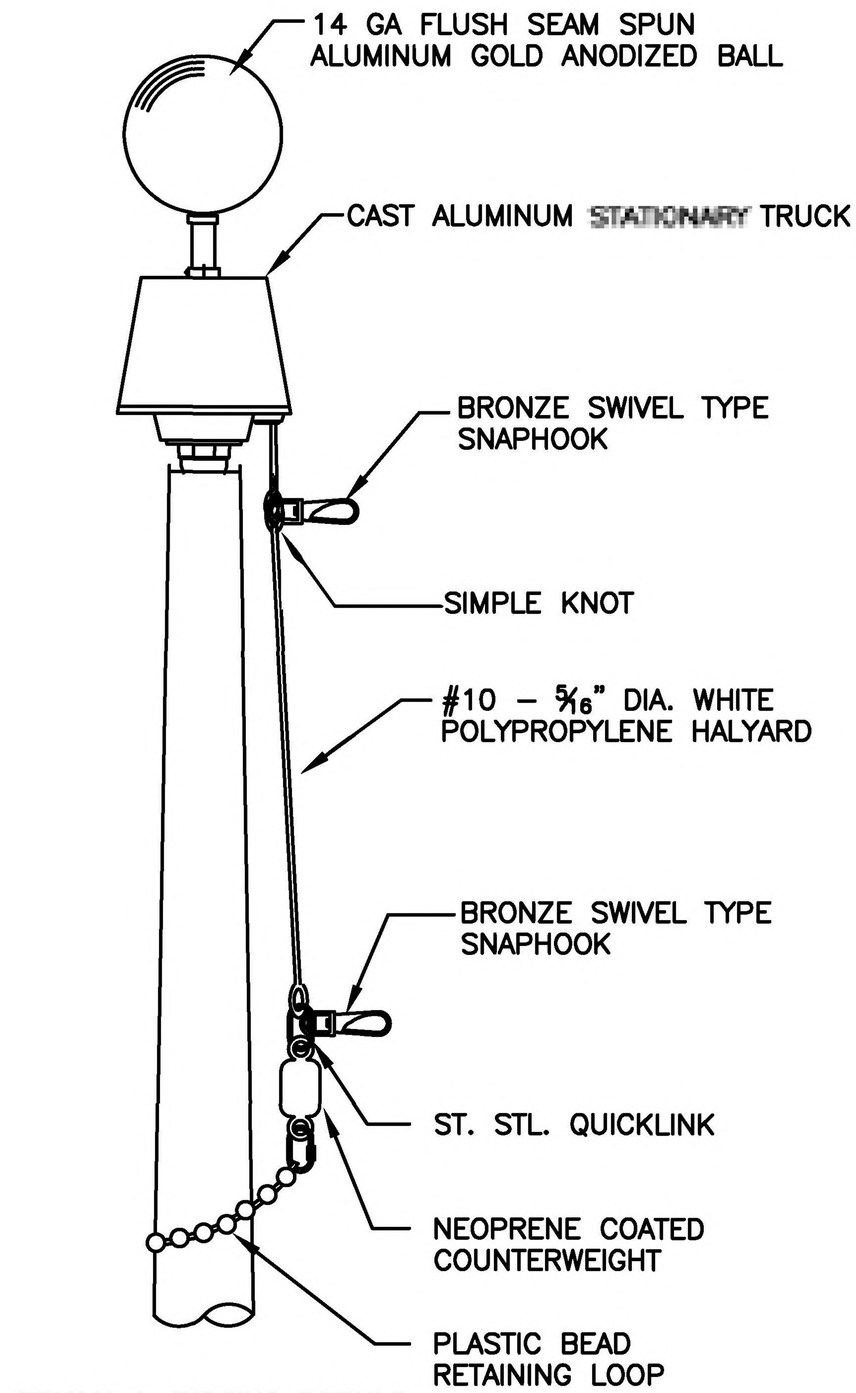

TRUCK & RIGGING DETAILS

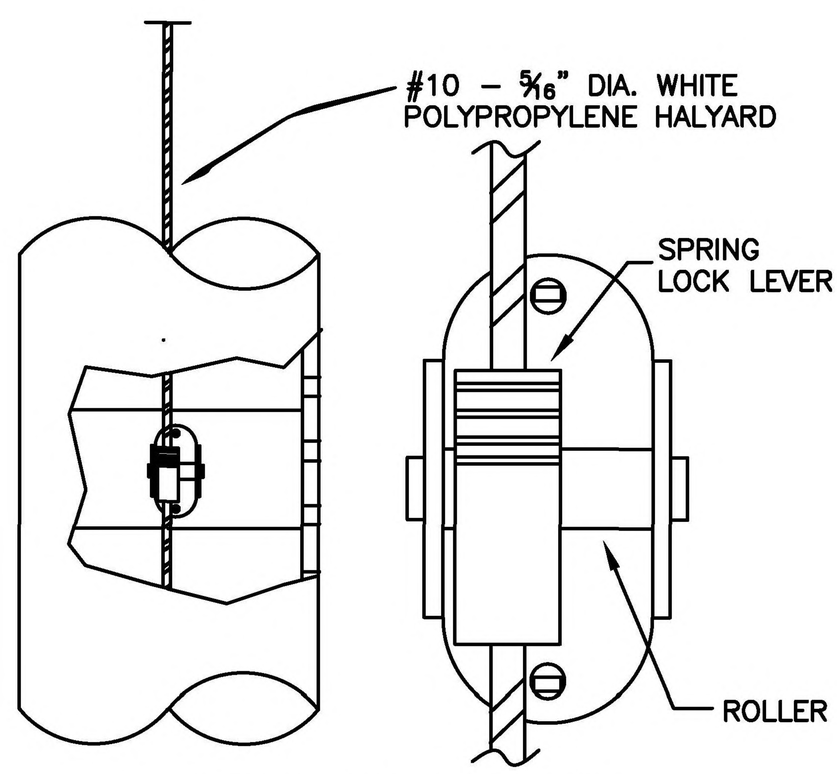

INTERNAL CAM CLEAT SYSTEM

Specifications	
Exposed Height:	
Set Depth:	
Total Length:	
Butt Diameter:	
Wall Thickness:	
Top Diameter:	
Flagpole Sections:	
* Max Flag Size:	
* Max Wind Speed w/Nylon Flag:	
* Max Wind Speed No Flag:	
* Wind Speed Specifications from ANSI/NAAMM FP 1001-07	

Eagle Mountain
Flag & Flagpole

333 FM 2325 Wimberley, TX 78676

512-847-0010
info@emflag.com