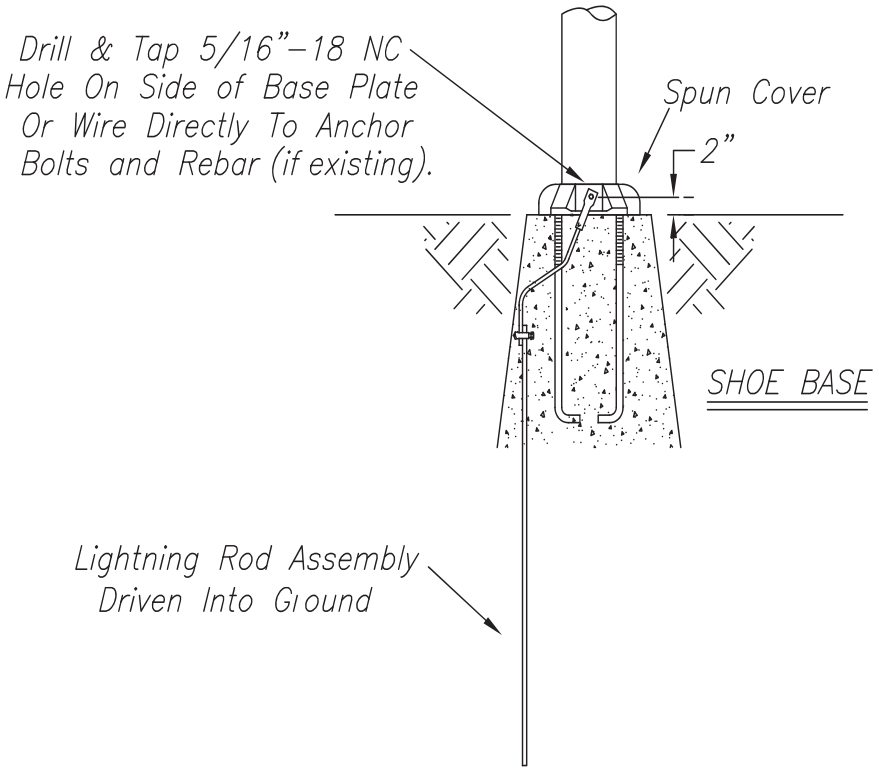
Drill & Tap 5/16"–18 NC
Hole On Side of Base Plate
Or Wire Directly To Anchor
Bolts and Rebar (if existing).
Spun Cover
2"
SHOE BASE
Lightning Rod Assembly
Driven Into Ground

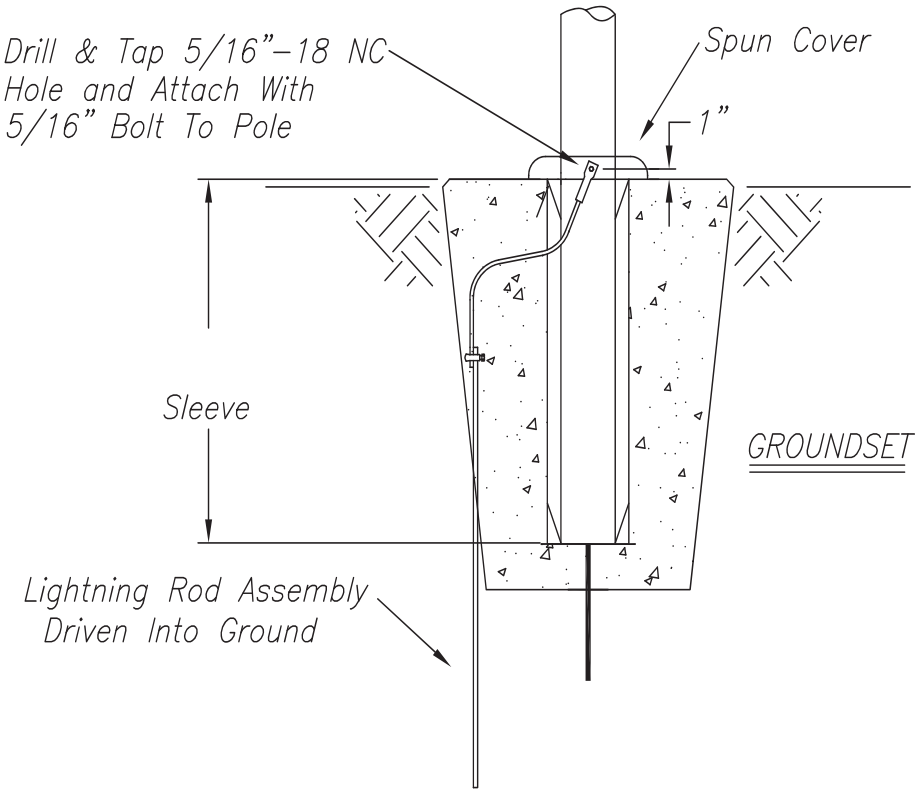
Drill & Tap 5/16"–18 NC
Hole and Attach With
5/16" Bolt To Pole
Spun Cover
1"
Sleeve
GROUNDSET
Lightning Rod Assembly
Driven Into Ground

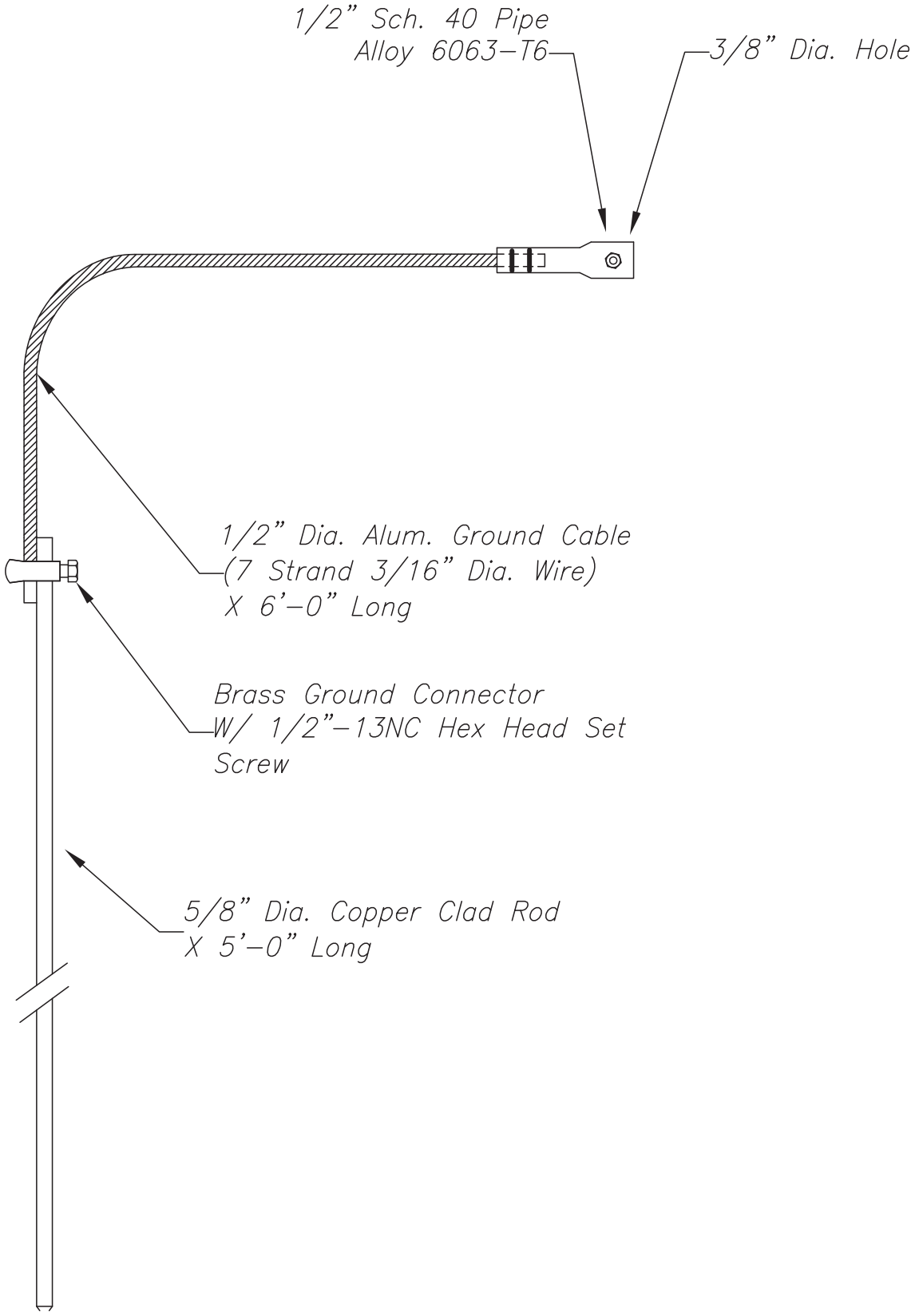
1/2" Sch. 40 Pipe
Alloy 6063–T6
3/8" Dia. Hole
1/2" Dia. Alum. Ground Cable
(7 Strand 3/16" Dia. Wire)
X 6'–0" Long
Brass Ground Connector
W/ 1/2"–13NC Hex Head Set
Screw
5/8" Dia. Copper Clad Rod
X 5'–0" Long